control solutions
TERACOM



Locky-BT-v2
125 kHz RFID terminal

USER MANUAL

Distribuída no Brasil pela LRI | vendas@lri.com.br | 51 2129-3000

Short description

Locky-BT-v2 is a compact 125kHz RFID terminal designed for computer-based and controller-based access control systems. It reads EM4102-compatible RFID identifiers and transmits their unique numbers over an RS-232 (0/5V) serial interface. The device features a built-in antenna, relay output, LED indicators and buzzer, all controllable through serial commands. Its button-type form factor enables easy panel mounting, making it suitable for integration into embedded, industrial and building access applications.

Features

- 125kHz EM4102 RFID terminal with integrated short-range antenna (≤3 cm);
- Serial RS-232 (0/5V) interface for transmitting tag IDs in real time;
- Relay output, LEDs and buzzer, fully controllable via serial commands;
- Hexadecimal communication protocol with CRC validation for reliable data exchange;
- Configurable LED and buzzer behavior (activation time, pulse mode, blinking patterns);
- Compact button-type design for easy panel mounting (Ø38 mm, Ø35 mm hole).

Specifications

- Dimensions	Ø 38mm x 27mm;
- Mounting hole	Ø 35mm;
- Operating temperature range	-10 to +40°C;
- Operating voltage range	10 ÷ 24VDC +10%/-15%;
- Current consumption (with relay ON)	180mA @ 12VDC;
- Maximum switchable voltage/current	24VDC / 1A;
- Reading range	≤ 3cm;
- RFID tags	125kHz, EM4102 compatible;
- Nonvolatile memory for up to	1000 tags;
- Relay activation time	1 ÷ 240 s. (3s. by default);
- Connector	Screw terminals.

⚠ **Caution!** The device does not contain any internal overcurrent protection facilities on the relays' contact lines. External fuses or short circuit current limiting circuit breakers, rated to 0.63 Amps, are to be used for overcurrent protection of the connecting lines.

⚠ **Caution!** In case of switching an inductive load, an RC or diode snubber are to be used for relay contact protection (arc suppression).

Dimensions and pinout

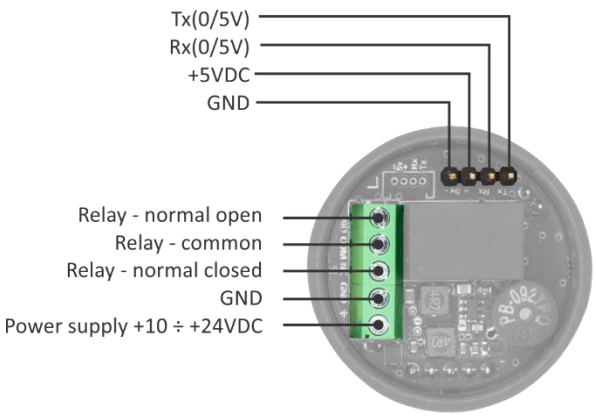

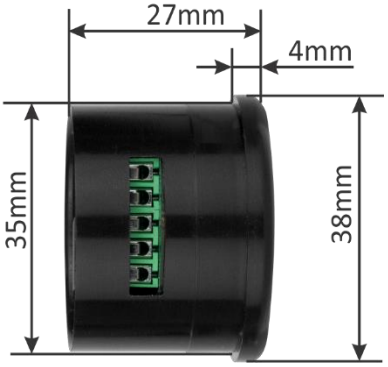

Distribuída no Brasil pela LRI | vendas@lri.com.br | 51 2129-3000

Operating mode

In standby mode, approaching an RFID tag or command on the interface, the red LED flashes three times every second. This indication can be enabled/disabled with a command. In standby mode, when the indication is disabled, the LEDs do not light up.

If an RFID tag is approached, the controller activates the green LED and the buzzer for a short time (200ms). At the same time, a packet with the unique identifier number is transmitted over the serial interface. In response to this packet, the control device (computer) can send commands to activate the relay, LEDs and buzzer.

Attention:

The controller's serial interface works with 0/5V levels. To work with a computer or other specialized devices, an adapter cable must be used - Cable converter Locky USB / TTL.

The interface parameters are: 19200bps, 8 bits, 1 stop bit, No parity.

The communication protocol is in hexadecimal format as follows:

- Beginning of a packet - 1 byte; constant 0xF5
- Packet length - 1 byte; the sum of the lengths of "Packet Length", "Command", "Data" and "CRC";
- Command – 1 byte;
- Data – different length for different commands;
- CRC – 1 byte; The CRC (Data Validity) is calculated with the code x^8+x^5+x^4+ x^0 applied to the "Packet Length", "Command", "Data" bytes.

The controller ignores commands with an incorrect CRC and does not return a response.

If the checksum is correct and the data in the command is within the specified range, the controller will acknowledge the command. In the response, 0x80 will be added to the command byte.

If the checksum is correct but the data in the command is not within the specified range, the controller will respond without acknowledging the command. In the response, the command byte will be the command number unchanged.

Commands

1. [**0B**] - sending the RFID tags number from the controller
   Example:
   When approaching an RFID tag, the following is transmitted:: [F5][08][0B][1C][00][B2][F7][A8][3D]
   Където:
   - [F5] – start of packet;
   - [08] – packet length, in this command 8 bytes;
   - [0B] – command;
   - [1C][00][2B][F7][A8] – RFID tag number;
   - [3D] – CRC.

2. [**16**] – command to activate the relay (it is sent to the controller)
   Example:

Distribuída no Brasil pela LRI | vendas@lri.com.br | 51 2129-3000

The following is sent to the controller [F5][04][16][05][E7]
Where:

- [F5] – start of packet;
- [04] – packet length, in this command 4 bytes;
- [16] – command;
- [05] – relay activation time 5 seconds; Valid values are from 0 to 240. If equal to 0, the activation is interrupted;
- [E7] – CRC.

If the checksum is correct and the data is within the specified range, the controller will activate the relay for 5 seconds and confirm the command with [F5][03][96][99].
Where:

- [F5] – start of packet;
- [03] – packet length, in this command 3 bytes;
- [96] – command confirmation; added 0x80 to the command;
- [99] – CRC.

If the controller responds with [F5][03][16][15], i.e. did not add 0x80 to the command, it means the data is not in the specified range.

3. [**17**] – command to activate the LEDs (it is sent to the controller)
   Example:
   The following is sent to the controller [F5][06][17][01][11][05][9E]
   Where:
   - [F5] – start of packet;
   - [06] – packet length, in this command 6 bytes;
   - [17] – command;
   - [01] – activates the red LED; Valid values: 0x01 red; 0x02 – green; 03 – activates both LEDs;
   - [11] – for 11 seconds; Valid values from 0 to 255. If equal to 0, the LED is turned off;
   - [05] – blink period 500ms. Valid values: 0 to 255, the number is multiplied by 100 ms; if equal to 0, turns ON constantly.
   - [9E] – CRC.

   This command will turn on the red LED for 11 seconds in pulse mode - 500ms on, 500ms off.
   If the checksum is correct and the data is within the specified range, the controller will respond with [F5][03][97][C7]. If the data is not in the specified range the response will be [F5][03][17][4B].

4. [**18**] – command to activate the buzzer (it is sent to the controller)
   Example:
   The following is sent to the controller [F5][05][18][05][05][2E]
   Where:
   - [F5] – start of packet;
   - [05] – packet length, in this command 5 bytes;
   - [18] – command;
   - [05] – activation time 5 seconds. Valid values from 0 to 255. If equal to 0, the activation will be interrupted;
   - [05] – blink period 500ms. Valid values: from 0 to 255, the number is multiplied by 100 ms; If equal to 0, the activation will be without interruption;
   - [2E] – CRC.

   With this command, the buzzer will be activated for 5 seconds in pulse mode - 500ms activated, 500ms not activated.

If the checksum is correct and the data is within the specified range, the controller will respond with [F5][03][98][86]. If the data is not in the specified range the response will be [F5][03][18][0A].

5. [**21**] – command for enable/disable the LED indicator in standby mode
   Example:
   The following is sent to the controller [F5][04][21][FF][AE]
   Where:
   - [F5] – start of packet;
   - [04] – packet length, in this command 4 bytes;
   - [21] – command;
   - [FF] – enable LED indicator. Valid value: from 0 to 255. All values other than 0 enable LED indicator;
   - [AE] – CRC.

   This command will allow the LED indicator in standby mode.
   If the checksum is correct and the data is within the specified range, the controller will respond with [F5][03][A1][A4]. If the data is not in the specified range the response will be [F5][03][21][28].

Package content

- Locky-BT-v2 controller
- Snap ring
- Service tag
- Quick start guide





Distribuída no Brasil pela LRI | vendas@lri.com.br | 51 2129-3000