control solutions
TERACOM



Locky-BF-v2
RFID industrial switch

USER MANUAL

Distribuída no Brasil pela LRI | vendas@lri.com.br | 51 2129-3000

Short description

Locky-BF-v2 is a compact RFID industrial switch designed for secure activation and control of electronic and electrical equipment. With support for 125kHz EM4102 RFID tags and an integrated antenna, the device provides reliable short-range identification and robust access control in industrial environments. Its button-shaped, panel-mount design ensures quick installation, while the built-in relay output enables straightforward integration into automation systems.

Features

- Relay-controlled RFID industrial switch for 125kHz EM4102 tags;
- Integrated antenna with reading distance up to 3 cm;
- Easy tag management via service tag (add / group delete);
- Nonvolatile memory for up to 1000 identifiers;
- Adjustable relay activation time: 1–240 s;
- Clear LED status indication (red/green/yellow);
- Compact button-type design for panel installation (Ø38 mm);
- Wide supply voltage: 10–24 VDC.

Specifications

-	Dimensions	Ø 38mm x 27mm;
-	Mounting hole	Ø 35mm;
-	Operating temperature range	-10 to +40°C;
-	Operating voltage range	10 ÷ 24VDC +10%/-15%;
-	Current consumption (with relay ON)	180mA @ 12VDC;
-	Maximum switchable voltage/current	24VDC / 1A;
-	Reading range	≤ 3cm;
-	RFID tags	125kHz, EM4102 compatible;
-	Nonvolatile memory for up to	1000 tags;
-	Relay activation time	1 ÷ 240 s. (3s. by default);
-	Connector	Screw terminals.

⚠ **Caution!** The device does not contain any internal overcurrent protection facilities on the relays' contact lines. External fuses or short circuit current limiting circuit breakers, rated to 0.63 Amps, are to be used for overcurrent protection of the connecting lines.

⚠ **Caution!** In case of switching an inductive load, an RC or diode snubber are to be used for relay contact protection (arc suppression).

Dimensions and pinout

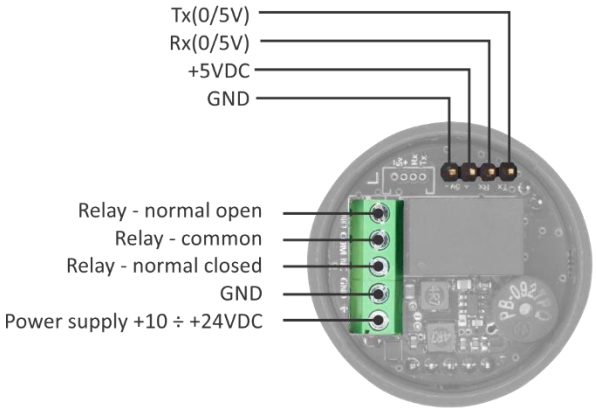

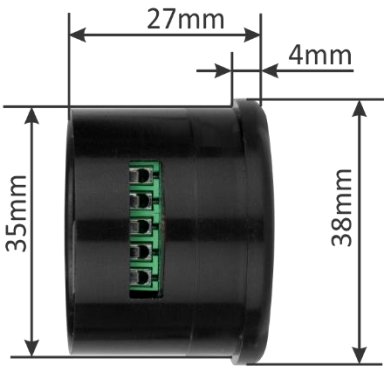

Distribuída no Brasil pela LRI | vendas@lri.com.br | 51 2129-3000

Operating modes

Normal operating mode

In this mode, the device expects a valid RFID tag to toggle its relay output. When the relay output is ON, the LED will turn green. The LED indicator turns red when the relay output is OFF.

If an invalid tag is placed within the range of the antenna, the red LED flashes 6 times. The relay output will not change its output state.

Adding new identifiers

The controller enters into this mode when the service tag is put in the range of the antenna for a short time (less than 5 seconds). The LED turns yellow and the controller beeps once. In this mode, each new tag that is placed in the range of the antenna will be added as a valid one in the memory of the controller. On every added tag the controller will beep twice and the LED will blink once.

If the tag is already in the memory or the memory is full, the red LED blinks 3 times.

To return to the normal operating mode, the service tag should be placed again for a short time.

The device will return automatically to the normal operation mode if there is no activity for 60 seconds.

Deleting all identifiers

Locky-BF-v2 enters in this mode when the service tag is put and hold within range of the antenna for more than 10 seconds. After this time the controller will start deleting all identifiers from its memory. During the deleting the yellow LEDs blink fast.

After erasing the memory, the device returns to normal operating mode. The service tag will not be deleted from the controller's memory.

Package content

- Locky-BF-v2 controller
- Snap ring
- Service tag
- Quick start guide





Distribuída no Brasil pela LRI | vendas@lri.com.br | 51 2129-3000